Surname	Centre Number	Candidate Number
Other Names		0

GCSE

4370/03

MATHEMATICS – LINEAR
PAPER 1
FOUNDATION TIER

A.M. WEDNESDAY, 6 November 2013

1 hour 45 minutes

CALCULATORS ARE NOT TO BE USED FOR THIS PAPER

ADDITIONAL MATERIALS

A ruler, a protractor and a pair of compasses may be required.

INSTRUCTIONS TO CANDIDATES

Use black ink or black ball-point pen.

Write your name, centre number and candidate number in the spaces at the top of this page.

Answer **all** the questions in the spaces provided.

Take π as 3·14.

INFORMATION FOR CANDIDATES

You should give details of your method of solution when appropriate.

Unless stated, diagrams are not drawn to scale.

Scale drawing solutions will not be acceptable where you are asked to calculate.

The number of marks is given in brackets at the end of each question or part-question.

You are reminded that assessment will take into account the quality of written communication (including mathematical communication) used in your answer to question **2***(e)*.

For Examiner's use only		
Question	**Maximum Mark**	**Mark Awarded**
1.	**9**	
2.	**10**	
3.	**9**	
4.	**4**	
5.	**6**	
6.	**4**	
7.	**6**	
8.	**4**	
9.	**6**	
10.	**8**	
11.	**5**	
12.	**5**	
13.	**4**	
14.	**4**	
15.	**8**	
16.	**5**	
17.	**3**	
Total	**100**	

4370 030001

Formula List

Area of trapezium $= \frac{1}{2}(a + b)h$

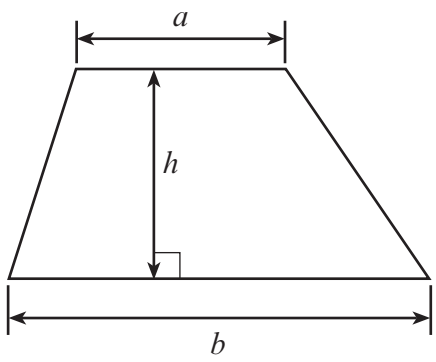

Volume of prism = area of cross-section × length

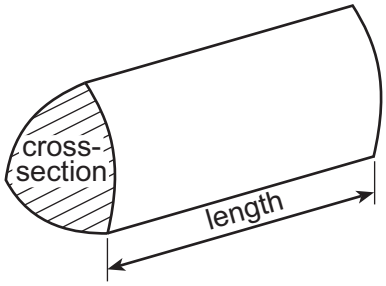

Examiner only

1. *(a)* (i) The annual profit made by a company was two million, twenty five thousand, three hundred and ten pounds.
Write this number in figures. [1]

.....

(ii) The number of litres of petrol sold at a filling station last week was 23 008.
Write this number in words. [1]

.....

(b) Using only the numbers in the following list,

38 34 46 47 32 42 57

write down

(i) two numbers that add up to 70, [1]

.....

(ii) the number which must be added to 37 to make 83, [1]

.....

(iii) a multiple of 6. [1]

.....

(c) Find the difference between 347 and 228. [1]

.....

.....

.....

(d) Write down a square number that is between 80 and 90. [1]

.....

(e) Write down all the factors of 28. [2]

.....

.....

.....

4370 030003

Examiner only

2. *(a)* Write down the value of the 7 in the number 47 361. [1]

.....

(b) Write down a prime number that has a tens digit of 5. [1]

.....

(c) Calculate 84 ÷ 6. [1]

.....

.....

(d) What fraction of the shape is shaded? Give your answer in its simplest form. [2]

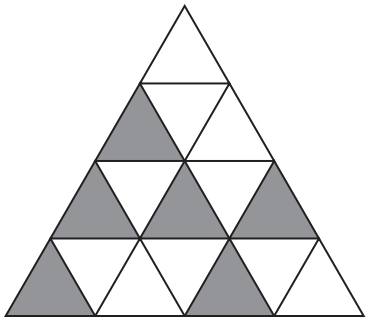

.....

.....

Examiner only

(e) *You will be assessed on the quality of your written communication in this part of the question.*

Megan has £8.
She buys some pens at 60p each and has 80p left over.
How many pens did she buy? [5]

.....

.....

.....

.....

.....

.....

.....

.....

.....

.....

.....

4370 030005

Examiner only

3. Thirty-five pupils were asked to choose which one of tennis (T), football (F), cricket (C) or hockey (H) they preferred.
The table shows the results.

C	F	H	H	C	T	H
T	H	F	C	H	T	C
H	C	T	T	T	C	F
C	H	C	F	H	F	H
T	H	H	C	T	F	C

(a) Using the centimetre squared grid on the opposite page, draw a bar chart for the data given. [6]

.....

.....

.....

.....

.....

.....

.....

.....

.....

.....

.....

.....

Examiner only

For use with question 3

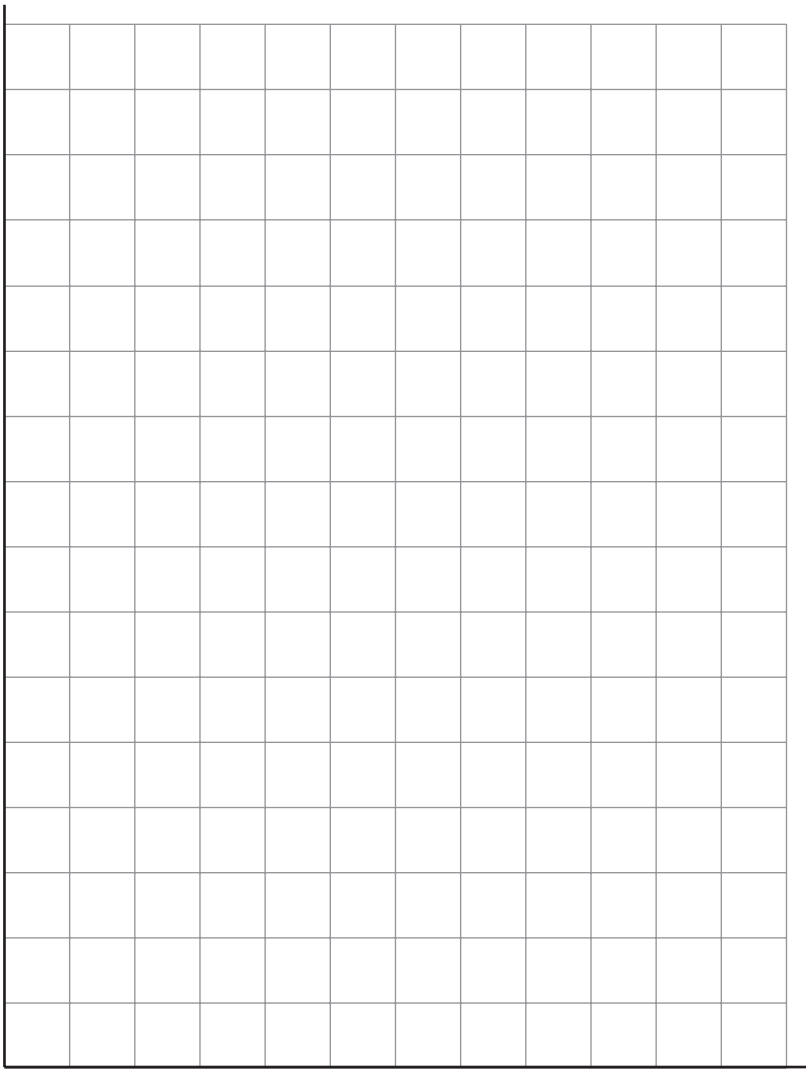

(b) Write down the mode. [1]

.....

(c) Find the probability that a child chosen at random from this group prefers cricket. [2]

.....

.....

.....

4370 030007

Examiner only

4. The formula for the speed of a stone thrown from the top of a building is

speed of the stone = time × 10 + starting speed

(a) Find the **speed of the stone** when the **starting speed** is 15 and the **time** is 4. [2]

.....

.....

.....

.....

(b) Find the **time** when the **starting speed** is 20 and the **speed of the stone** is 45. [2]

.....

.....

.....

.....

.....

.....

Examiner only

5. Two identical rectangles, each measuring 8 cm by 3 cm, are placed with two identical squares to make the shape shown in the diagram.

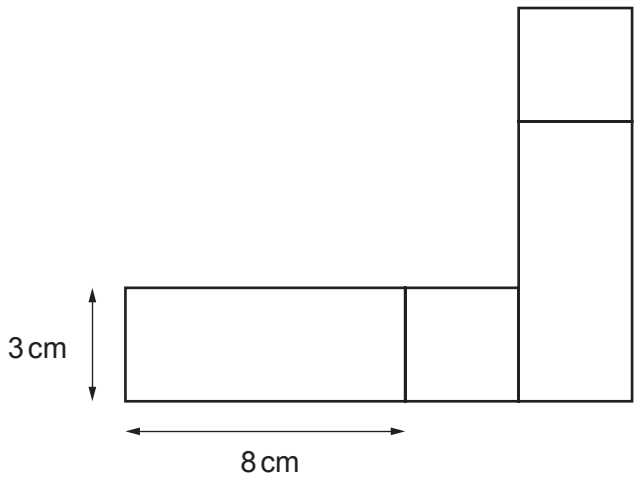

Diagram not drawn to scale

(a) Calculate the perimeter of the shape. [3]

.....

.....

.....

(b) Calculate the area of the shape.
Write down the units of your answer. [3]

.....

.....

.....

.....

4370 030009

Examiner only

6. Complete the following table so that each row will show equivalent fractions, decimals and percentages. [4]

Fraction	Decimal	Percentage
$\frac{1}{4}$	0·25	25%
		40%
	0·3	

Examiner only

7. In a game, a person scores

- 3 points for a win,
- 1 point for a draw,
- –2 points for a loss.

(a) Geraint plays the game **four times**.
He wins twice, draws once and loses once.
What is Geraint's score? [2]

.....

.....

(b) Mary plays the game **four times** and has a final score of 0.
Write down the number of wins, draws and losses Mary had and justify your answer. [2]

.....

.....

.....

.....

(c) John plays the game **five times** and has a final score of –4.
Write down the number of wins, draws and losses John had and justify your answer. [2]

.....

.....

.....

.....

4370 030011

Examiner only

8.

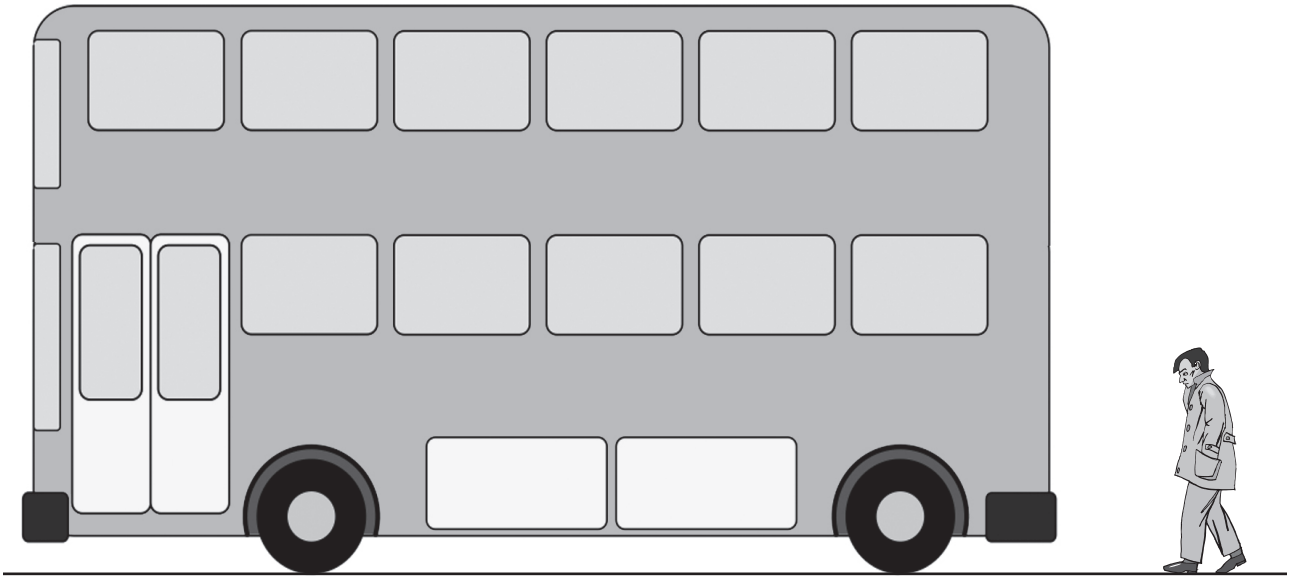

The above diagram shows a bus and a man.

Write down an **estimate** for the **actual height** of the man. .....

Using this estimate for the height of the man, estimate the **actual height** of the top of the bus above ground level. [4]

.....

.....

.....

.....

.....

.....

.....

.....

Examiner only

9. *(a)* *ABCD* is a rhombus with $A\hat{D}B = 37°$.
Find the size of angle x. [3]

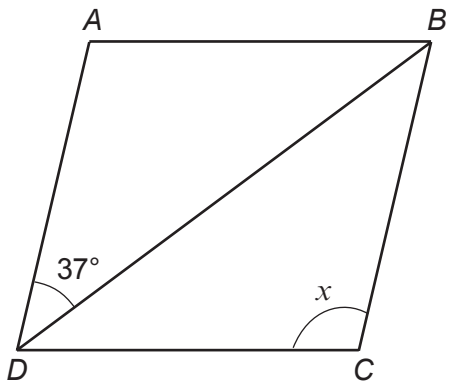

Diagram not drawn to scale

.....

.....

.....

$x =$ ..... °

(b) Find the size of angle y. [3]

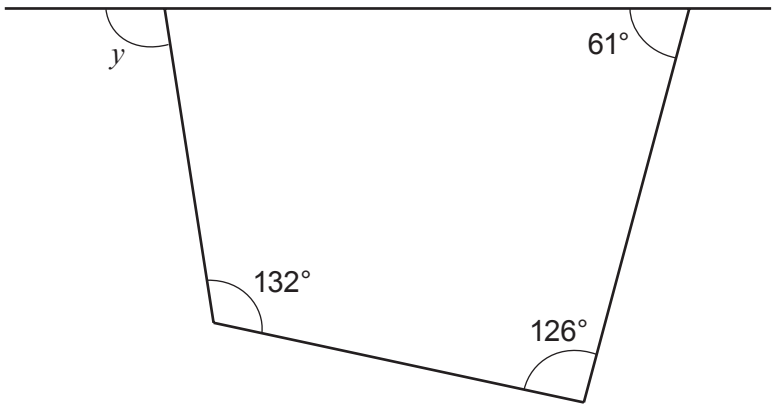

Diagram not drawn to scale

.....

.....

.....

.....

$y =$ ..... °

Examiner only

10. There are two packs of cards. One pack is coloured blue and the other pack is coloured red. The blue pack has three cards numbered

The red pack has four cards numbered

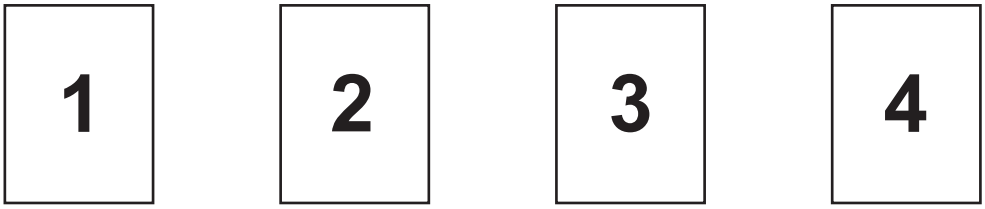

In a game, a player chooses one card from the blue pack and one card from the red pack. The player's score is the product of the two numbers.

For example, if the number on the blue card is 1 and the number on the red card is 3, the player works out 1 × 3 = 3 and the player scores 3.

(a) Complete the following table to show all the possible scores. [2]

Red pack	Blue pack: 1	4	5
4	4	.....	.....
3	3	.....	.....
2	2	.....	.....
1	1	.....	.....

Examiner only

(b) A player wins a prize by getting a score of 10 or more.

(i) What is the probability of a player winning a prize? [2]

.....

.....

(ii) 60 people each play the game once.
Approximately how many would you expect to win a prize? [2]

.....

.....

(iii) It costs 80p to play the game once. The prize for getting a score of 10 or more is £1.50.
If the 60 people each play the game once, approximately how much profit do you expect the game to make? [2]

.....

.....

.....

.....

.....

.....

Examiner only

11. *(a)* Simplify $5a + 3b - 6a - b$. [2]

.....

.....

.....

(b) Solve each of the following equations.

(i) $\frac{x}{5} = 10$ [1]

.....

.....

.....

(ii) $3x + 7 = 19$ [2]

.....

.....

.....

.....

.....

Examiner only

12. *(a)* For each of the following statements, circle whether it is true or false.
You **must** give an explanation for your choice.

(i) All prime numbers are odd. [1]

true / **false**

.....

.....

(ii) If you halve a whole number ending in 8 you will always get a number ending in 4. [2]

true / **false**

.....

.....

(b) Eleanor says

"When you multiply any whole number by the one before it, the result is always an even number."

Explain why she is correct. [2]

.....

.....

13. *(a)* Express 150 as a product of prime numbers in index form. [3]

.....

.....

.....

.....

.....

.....

.....

(b) What is the smallest positive whole number that 150 can be multiplied by to make a perfect square? [1]

.....

.....

Examiner only

14. Tom collected 100 logs and measured their lengths in centimetres.

The table below shows a grouped frequency distribution of his results.

Length of log, l cm	$50 < l \leqslant 55$	$55 < l \leqslant 60$	$60 < l \leqslant 65$	$65 < l \leqslant 70$	$70 < l \leqslant 75$
Frequency	4	18	38	30	10

(a) On the graph paper below, draw a grouped frequency diagram to show this data. [2]

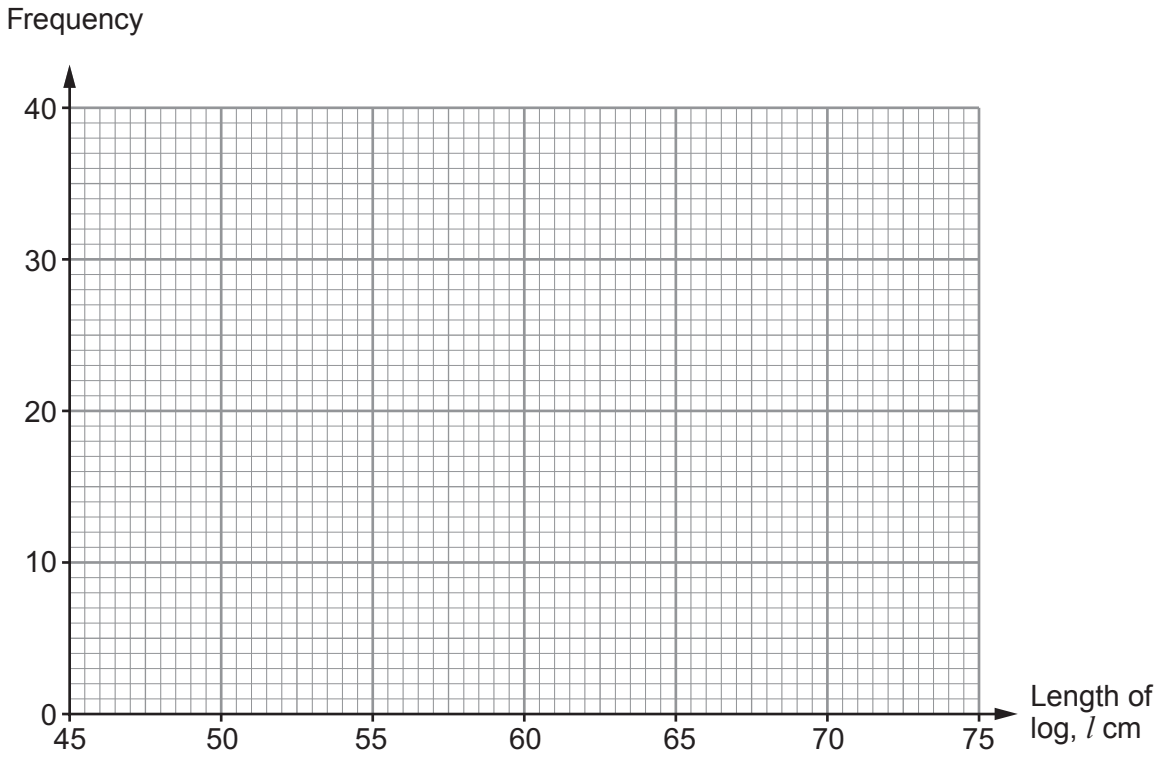

Examiner only

(b) Billy also collected and measured the lengths of some logs.
The grouped frequency diagram of his results is shown below.

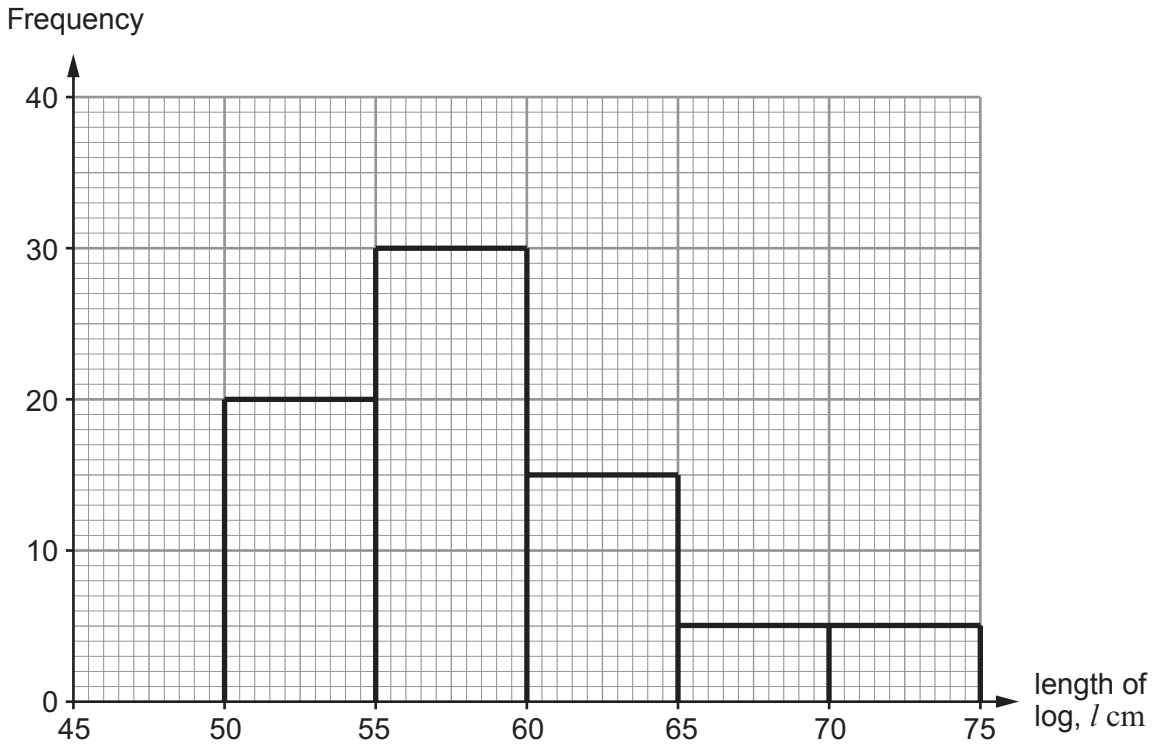

(i) How many logs did Billy collect and measure? [1]

.....

.....

(ii) Was it Tom or Billy who collected the longer logs, on average? [1]

.....

Explain how the grouped frequency diagrams help you to decide.

.....

.....

Examiner only

15.

Pasta with cheese and asparagus sauce

Serves **4** people

Ingredients:

4 ounces Butter

8 ounces Asparagus

12 ounces Pasta

1 Onion

2 tablespoons Stock

$\frac{2}{3}$ cup Cream

3 ounces Cheese

The recipe in Tamara's cookery book for pasta with cheese and asparagus sauce is shown above.

Information to convert units is also given, as follows:

- 1 cup is approximately 240 ml
- 4 ounces is approximately 115 g
- 1 tablespoon is 15 ml

Examiner only

(a) Complete the recipe for serving **8 people** using **ml** and **g**. [4]

.....

.....

.....

.....

.....

.....

.....

Pasta with cheese and asparagus sauce

Serves **8** people

Ingredients:

..... g Butter

..... g Asparagus

..... g Pasta

..... Onions

..... ml Stock

..... ml Cream

..... g Cheese

(b) Tamara has a $\frac{1}{2}$ litre carton of cream.
She has large quantities of all the other ingredients.
Calculate the largest number of portions of pasta with cheese and asparagus sauce that Tamara can make using as much of the cream as possible. [4]

.....

.....

.....

.....

.....

.....

.....

Examiner only

16. Martha is laying out a new design for a flowerbed in her garden, as shown in the diagram below.

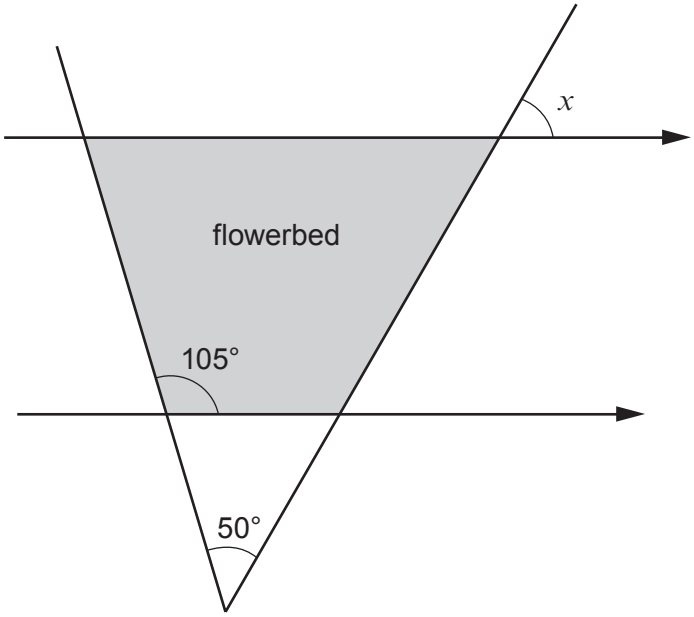

Diagram not drawn to scale

(a) Calculate the size of angle x. [2]

.....

.....

.....

.....

x = ... °

Examiner only

(b) Martha has another flowerbed in the shape of a parallelogram.

The longer sides measure twice the length of the shorter sides of the parallelogram.
The perimeter of this flowerbed is 24 metres.

Let the length of one of the shorter sides of the flowerbed be z metres.
Form an equation in terms of z.
Solve your equation to find the length of one of the shorter sides of the parallelogram.

[3]

.....

.....

.....

.....

.....

.....

.....

.....

Examiner only

17. Manilo won some money.

He gave each of his close friends $\frac{1}{24}$ of the money he won.

He kept the remaining $\frac{2}{3}$ of the money for himself.

How many close friends does Manilo have? [3]

.....

.....

.....

.....

.....

.....

.....

.....

.....

.....

END OF PAPER